Chapter 28

Direct Current Circuits (Dòng điện một chiều)

CENGAGE Learning™

Circuit Analysis

Simple electric circuits may contain batteries, resistors, and capacitors in various combinations.

For some circuits, analysis may consist of combining resistors.

In more complex complicated circuits, Kirchhoff's Rules may be used for analysis.

- These Rules are based on conservation of energy and conservation of electric charge for isolated systems.

Circuits may involve direct current or alternating current.

CENGAGE Learning™

Direct Current

When the current in a circuit has a constant direction, the current is called ***direct current.***

- Most of the circuits analyzed will be assumed to be in *steady state*, with constant magnitude and direction.

Because the potential difference between the terminals of a battery is constant, the battery produces direct current.

The battery is known as a source of emf.

CENGAGE Learning™

Electromotive Force (Suất điện động)

The electromotive force (emf), ε, of a battery is the maximum possible voltage that the battery can provide between its terminals.

- The emf supplies energy, it does not apply a force.

The battery will normally be the source of energy in the circuit.

The positive terminal of the battery is at a higher potential than the negative terminal.

We consider the wires to have no resistance.

CENGAGE Learning™

Internal Battery Resistance

If the internal resistance is zero, the terminal voltage equals the emf.

In a real battery, there is internal resistance, *r.*

The terminal voltage, $\Delta V = \varepsilon - Ir$

The emf is equivalent to the *open-circuit* voltage.

- This is the terminal voltage when no current is in the circuit.
- This is the voltage labeled on the battery.

The actual potential difference between the terminals of the battery depends on the current in the circuit.

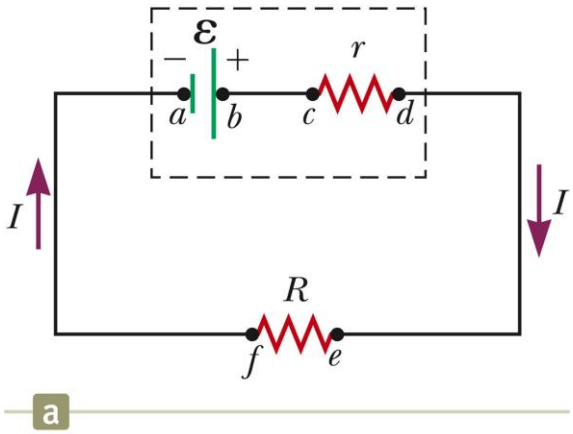

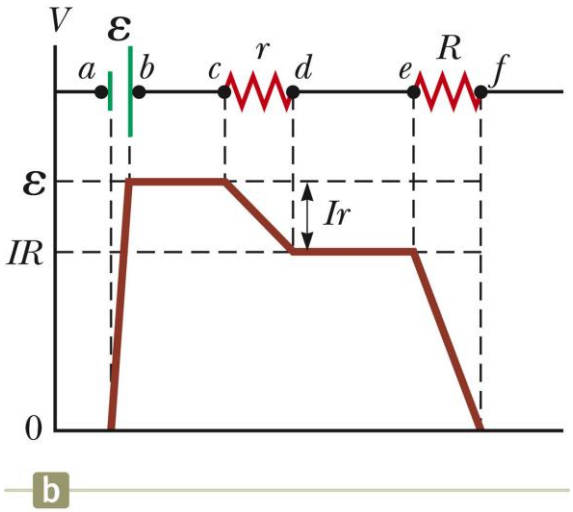

CENGAGE Learning™

Load Resistance

The terminal voltage also equals the voltage across the external resistance.

- This external resistor is called the *load resistance.*
- In the previous circuit, the load resistance is just the external resistor.
- In general, the load resistance could be any electrical device.
  - These resistances represent *loads* on the battery since it supplies the energy to operate the device containing the resistance.

CENGAGE Learning™

Power

The total power output of the battery is

$$P = I\,\Delta V = I\,\varepsilon$$

This power is delivered to the external resistor ($I^2 R$) and to the internal resistor ($I^2 r$).

$$P = I^2 R + I^2 r$$

The battery is a supply of constant emf.

- The battery does not supply a constant current since the current in the circuit depends on the resistance connected to the battery.
- The battery does not supply a constant terminal voltage.

CENGAGE Learning™

Resistors in Series

When two or more resistors are connected end-to-end, they are said to be in series.

For a series combination of resistors, the currents are the same in all the resistors because the amount of charge that passes through one resistor must also pass through the other resistors in the same time interval.

The potential difference will divide among the resistors such that the sum of the potential differences across the resistors is equal to the total potential difference across the combination.

CENGAGE Learning™

Resistors in Series, cont

Currents are the same

- $I = I_1 = I_2$

Potentials add

- $\Delta V = V_1 + V_2 = IR_1 + IR_2$

  $= I\,(R_1 + R_2)$

- Consequence of Conservation of Energy

The equivalent resistance has the same effect on the circuit as the original combination of resistors.

A circuit diagram showing the two resistors connected in series to a battery

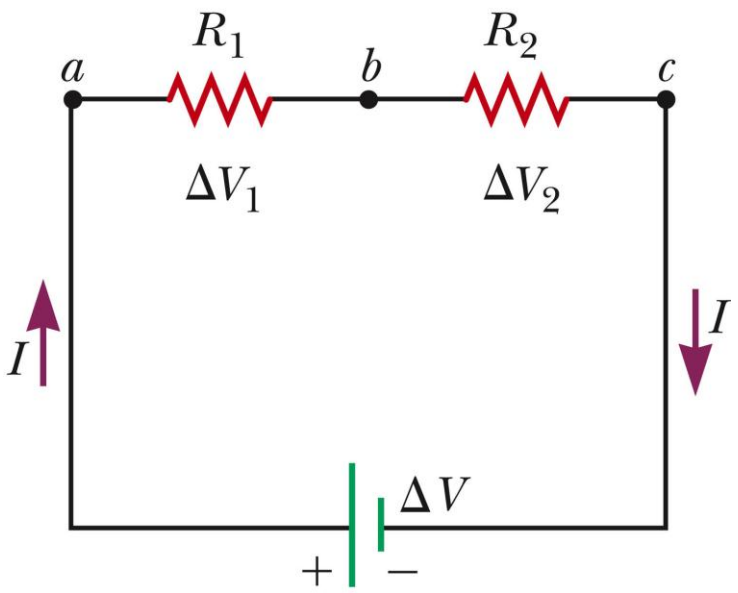

b

CENGAGE Learning™

Equivalent Resistance – Series

$R_{eq} = R_1 + R_2 + R_3 + \ldots$

The equivalent resistance of a series combination of resistors is the algebraic sum of the individual resistances and is always greater than any individual resistance.

If one device in the series circuit creates an open circuit, all devices are inoperative.

CENGAGE Learning™

Equivalent Resistance – Series – An Example

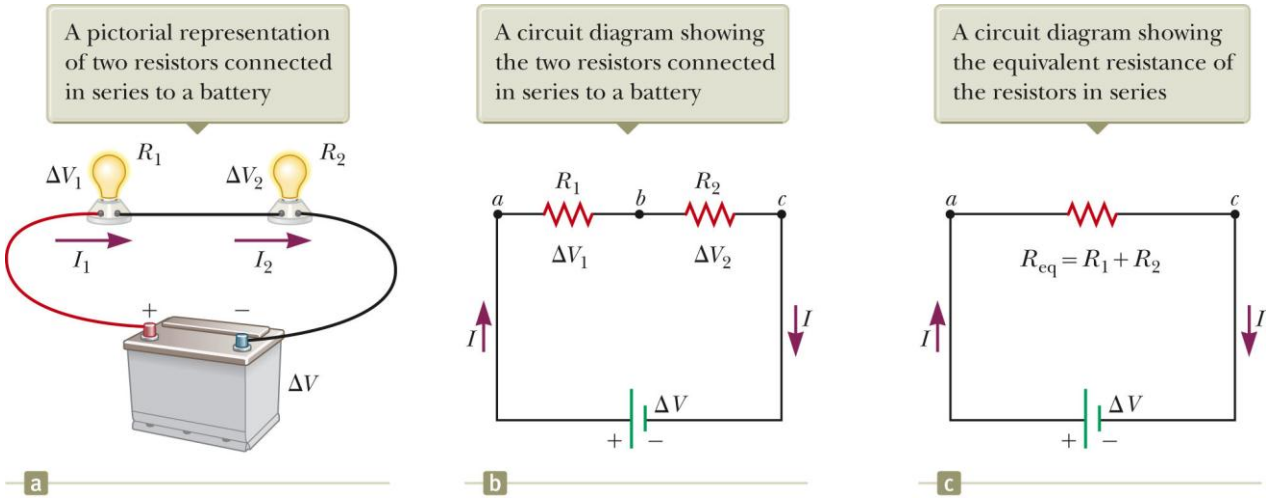

All three representations are equivalent.

Two resistors are replaced with their equivalent resistance.

CENGAGE Learning™

Some Circuit Notes

A local change in one part of a circuit may result in a global change throughout the circuit.

- For example, changing one resistor will affect the currents and voltages in all the other resistors and the terminal voltage of the battery.

In a series circuit, there is one path for the current to take.

In a parallel circuit, there are multiple paths for the current to take.

CENGAGE Learning™

Resistors in Parallel

The potential difference across each resistor is the same because each is connected directly across the battery terminals.

$$\Delta V = \Delta V_1 = \Delta V_2$$

A **junction** is a point where the current can split.

The current, I, that enters junction must be equal to the total current leaving that junction.

- $I = I_1 + I_2 = (\Delta V_1 / R_1) + (\Delta V_2 / R_2)$
- The currents are generally not the same.
- Consequence of conservation of electric charge

CENGAGE Learning™

Equivalent Resistance – Parallel, Examples

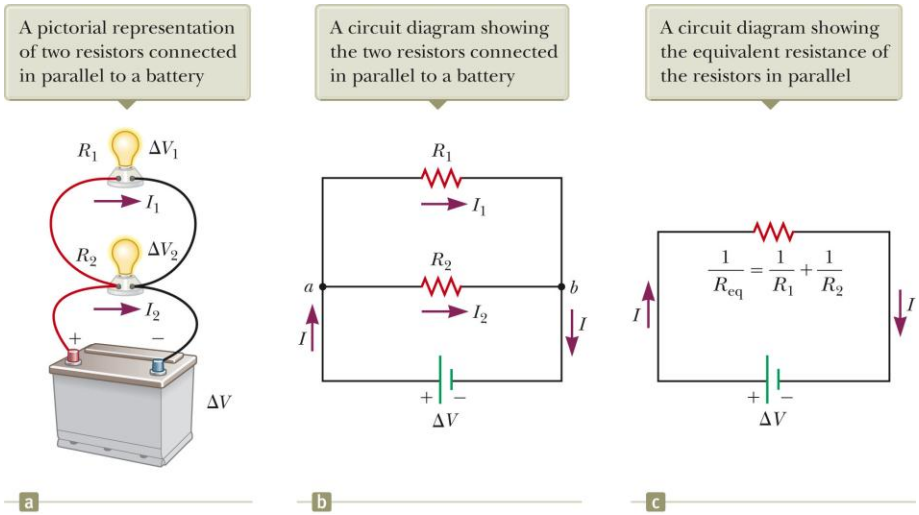

All three diagrams are equivalent.

Equivalent resistance replaces the two original resistances.

CENGAGE Learning™

Equivalent Resistance – Parallel

Equivalent Resistance

$$\frac{1}{R_{eq}} = \frac{1}{R_1} + \frac{1}{R_2} + \frac{1}{R_3} + \ldots$$

The inverse of the equivalent resistance of two or more resistors connected in parallel is the algebraic sum of the inverses of the individual resistance.

- The equivalent is always less than the smallest resistor in the group.

A circuit diagram showing the two resistors connected in parallel to a battery

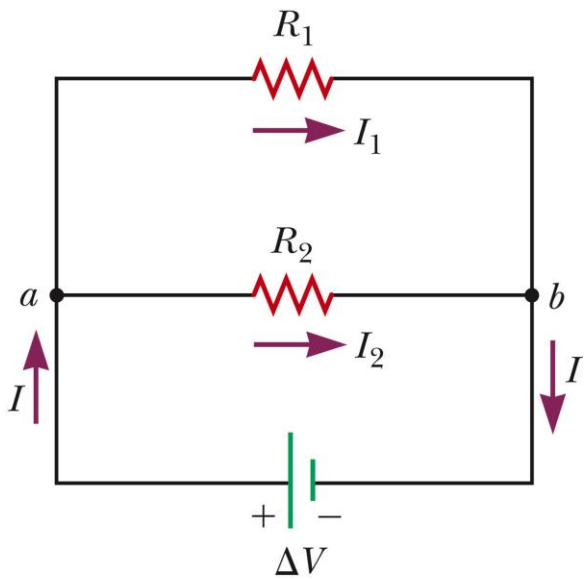

b

CENGAGE Learning™

Resistors in Parallel, Final

In parallel, each device operates independently of the others so that if one is switched off, the others remain on.

In parallel, all of the devices operate on the same voltage.

The current takes all the paths.

- The lower resistance will have higher currents.
- Even very high resistances will have some currents.

Household circuits are wired so that electrical devices are connected in parallel.

CENGAGE Learning™

Combinations of Resistors

The 8.0-Ω and 4.0-Ω resistors are in series and can be replaced with their equivalent, 12.0 Ω.

The 6.0-Ω and 3.0-Ω resistors are in parallel and can be replaced with their equivalent, 2.0 Ω.

These equivalent resistances are in series and can be replaced with their equivalent resistance, 14.0 Ω.

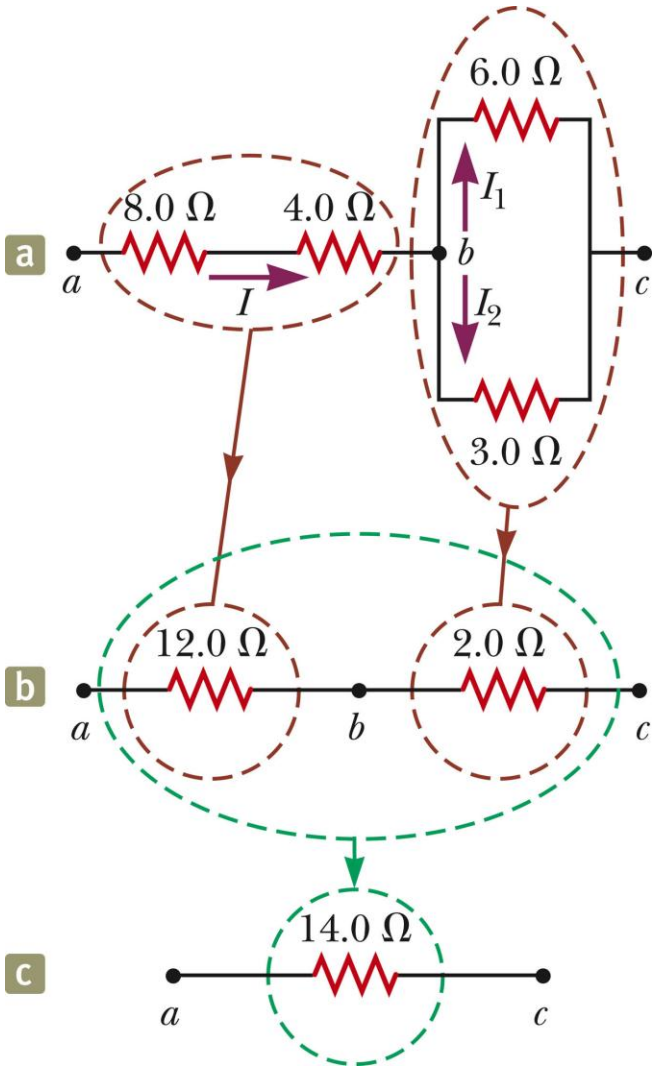

CENGAGE Learning™

Gustav Kirchhoff

1824 – 1887

German physicist

Worked with Robert Bunsen

Kirchhoff and Bunsen

- Invented the spectroscope and founded the science of spectroscopy
- Discovered the elements cesium and rubidium
- Invented astronomical spectroscopy

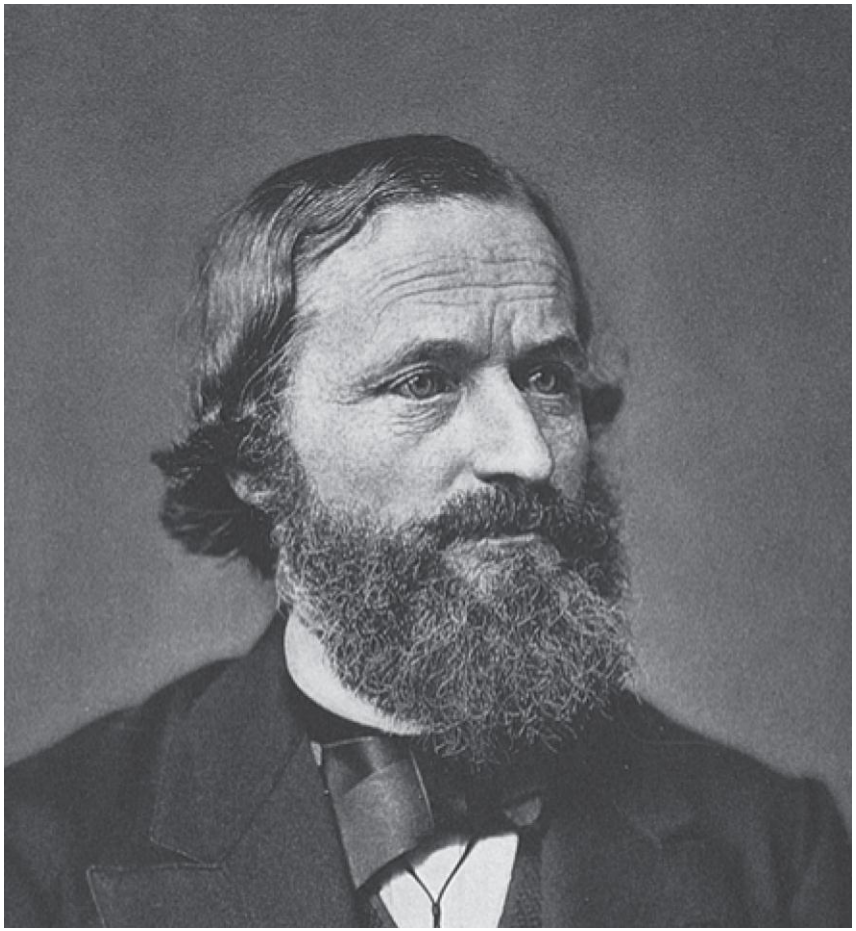

CENGAGE Learning™

Kirchhoff's Rules

There are ways in which resistors can be connected so that the circuits formed cannot be reduced to a single equivalent resistor.

Two rules, called **Kirchhoff's rules**, can be used instead.

CENGAGE Learning™

Kirchhoff's Junction Rule

Junction Rule

- The sum of the currents at any junction must equal zero.
  - Currents directed into the junction are entered into the equation as +I and those leaving as -I.
  - A statement of Conservation of Charge
- Mathematically,

$$\sum_{junction} I = 0$$

CENGAGE Learning™

More about the Junction Rule

$I_1 - I_2 - I_3 = 0$

Required by Conservation of Charge

Diagram (b) shows a mechanical analog

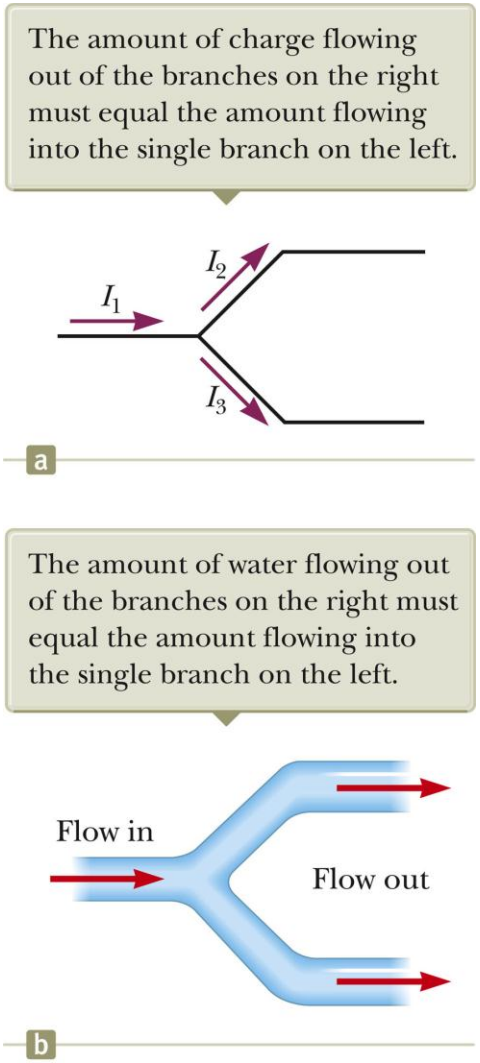

CENGAGE Learning™

Kirchhoff's Loop Rule

Loop Rule

- The sum of the potential differences across all elements around any closed circuit loop must be zero.
  - A statement of Conservation of Energy

Mathematically,

$$\sum_{\substack{\text{closed}\\ \text{loop}}} \Delta V = 0$$

CENGAGE Learning™

More about the Loop Rule

Traveling around the loop from *a* to *b*

In (a), the resistor is traversed in the direction of the current, the potential across the resistor is – *IR.*

In (b), the resistor is traversed in the direction opposite of the current, the potential across the resistor is is + *IR.*

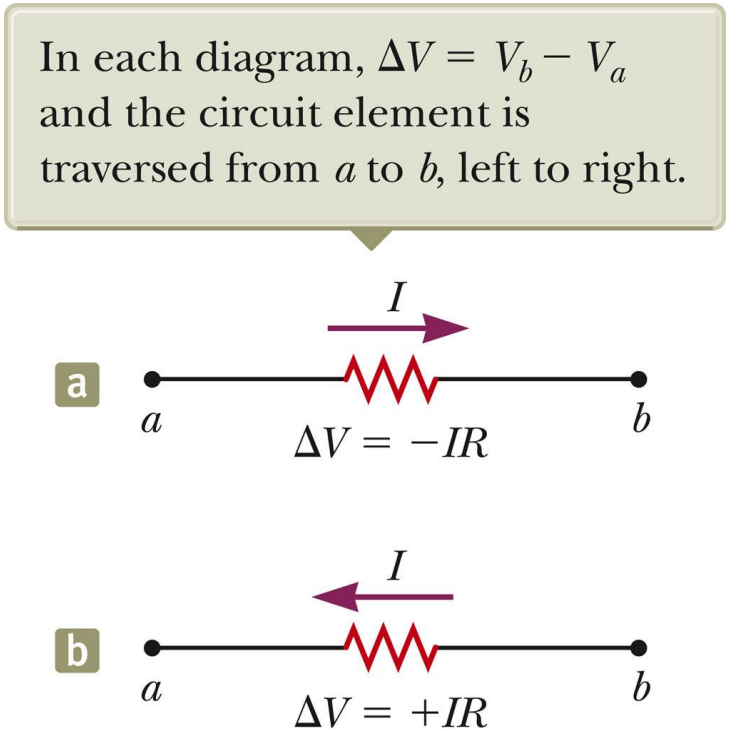

CENGAGE Learning™

Loop Rule, final

In (c), the source of emf is traversed in the direction of the emf (from – to +), and the change in the potential difference is +*ε*.

In (d), the source of emf is traversed in the direction opposite of the emf (from + to -), and the change in the potential difference is -*ε*.

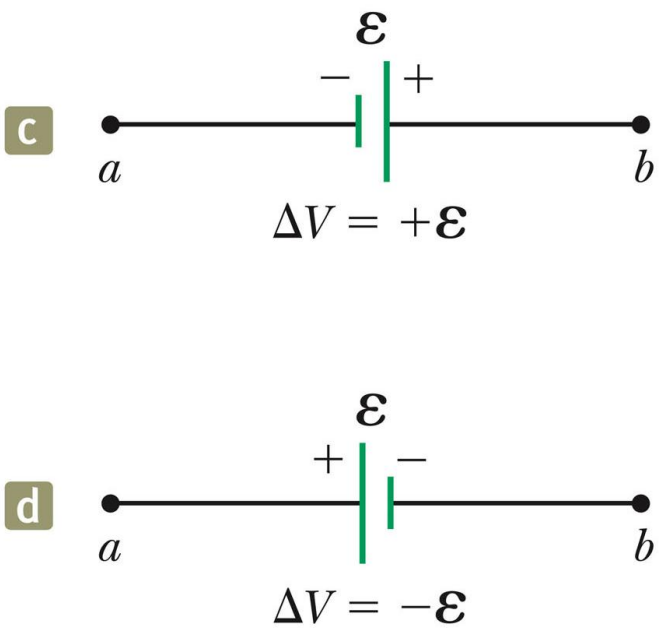

CENGAGE Learning™

Equations from Kirchhoff's Rules

Use the junction rule as often as needed, so long as each time you write an equation, you include in it a current that has not been used in a previous junction rule equation.

- In general, the number of times the junction rule can be used is one fewer than the number of junction points in the circuit.

The loop rule can be used as often as needed so long as a new circuit element (resistor or battery) or a new current appears in each new equation.

In order to solve a particular circuit problem, the number of independent equations you need to obtain from the two rules equals the number of unknown currents.

Any capacitor acts as an open branch in a circuit.

- The current in the branch containing the capacitor is zero under steady-state conditions.

CENGAGE Learning™

Problem-Solving Strategy – Kirchhoff's Rules

Conceptualize

- Study the circuit diagram and identify all the elements.
- Identify the polarity of each battery.
- Imagine the directions of the currents in each battery.

Categorize

- Determine if the circuit can be reduced by combining series and parallel resistors.
  - If so, proceed with those techniques
  - If not, apply Kirchhoff's Rules

CENGAGE Learning™

Problem-Solving Strategy, cont.

Analyze

- Assign labels and symbols to all known and unknown quantities.
- Assign directions to the currents.
  - The direction is arbitrary, but you must adhere to the assigned directions when applying Kirchhoff's rules.
- Apply the junction rule to any junction in the circuit that provides new relationships among the various currents.
- Apply the loop rule to as many loops as are needed to solve for the unknowns.
  - To apply the loop rule, you must choose a direction in which to travel around the loop.
  - You must also correctly identify the potential difference as you cross various elements.
- Solve the equations simultaneously for the unknown quantities.

CENGAGE Learning™

Problem-Solving Strategy, final

Finalize

- Check your numerical answers for consistency.
- If any current value is negative, it means you guessed the direction of that current incorrectly.
  - The magnitude will still be correct.

CENGAGE Learning™

RC Circuits

In direct current circuits containing capacitors, the current may vary with time.

- The current is still in the same direction.

An RC circuit will contain a series combination of a resistor and a capacitor.

CENGAGE Learning™

RC Circuit, Example

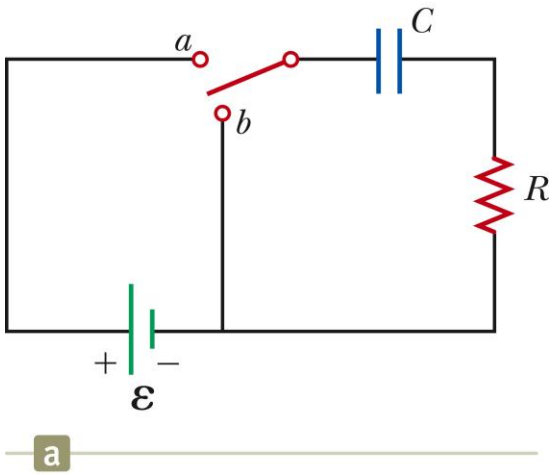

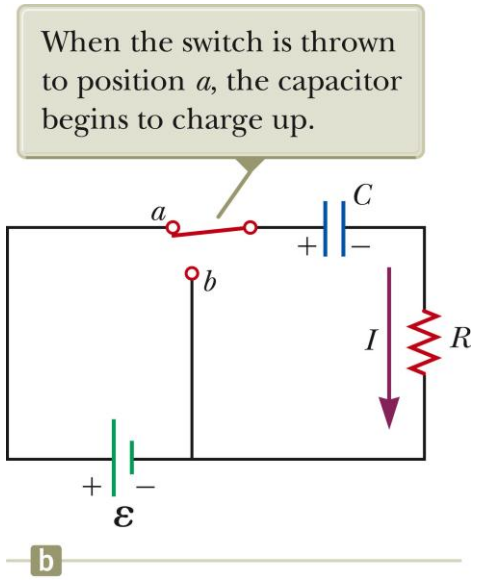

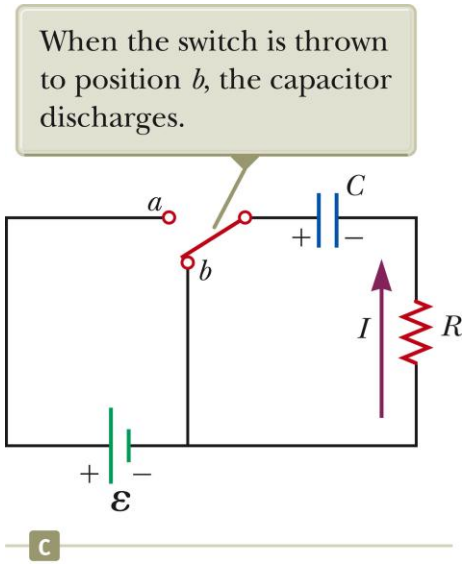

CENGAGE Learning™

Charging a Capacitor

When the circuit is completed, the capacitor starts to charge.

The capacitor continues to charge until it reaches its maximum charge ($Q = C\varepsilon$).

Once the capacitor is fully charged, the current in the circuit is zero.

As the plates are being charged, the potential difference across the capacitor increases.

At the instant the switch is closed, the charge on the capacitor is zero.

Once the maximum charge is reached, the current in the circuit is zero.

- The potential difference across the capacitor matches that supplied by the battery.

CENGAGE Learning™

Charging a Capacitor in an RC Circuit

The charge on the capacitor varies with time.

- $q(t) = C\mathcal{E}(1 - e^{-t/RC})$

  $= Q(1 - e^{-t/RC})$

The current can be found

$$I(t) = \frac{\mathcal{E}}{R} e^{-t/RC}$$

- τ is the *time constant*
  - $\tau = RC$

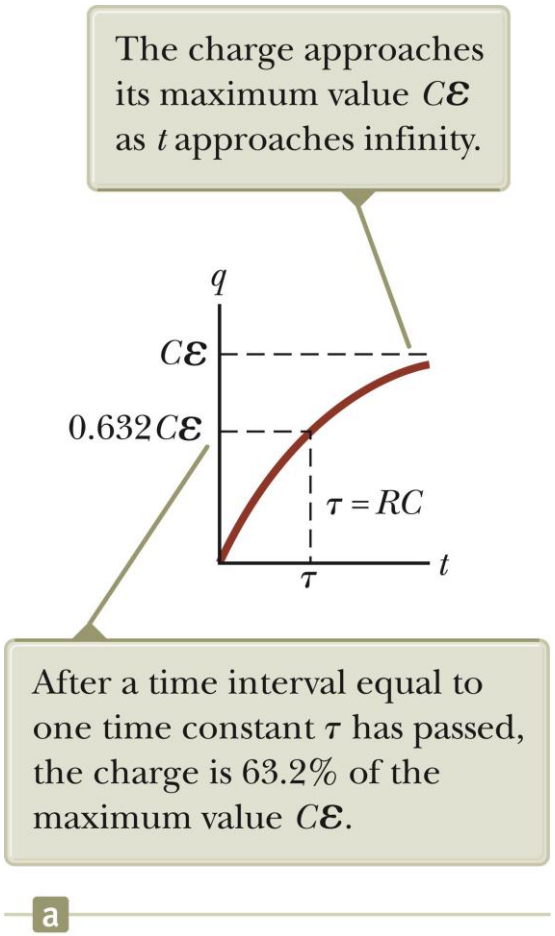

CENGAGE Learning™

Time Constant, Charging

The time constant represents the time required for the charge to increase from zero to 63.2% of its maximum.

τ has units of time

The energy stored in the charged capacitor is $\frac{1}{2} Q\mathcal{E} = \frac{1}{2} C\mathcal{E}^2$.

CENGAGE Learning™

Discharging a Capacitor in an RC Circuit

When a charged capacitor is placed in the circuit, it can be discharged.

- $q(t) = Qe^{-t/RC}$

The charge decreases exponentially.

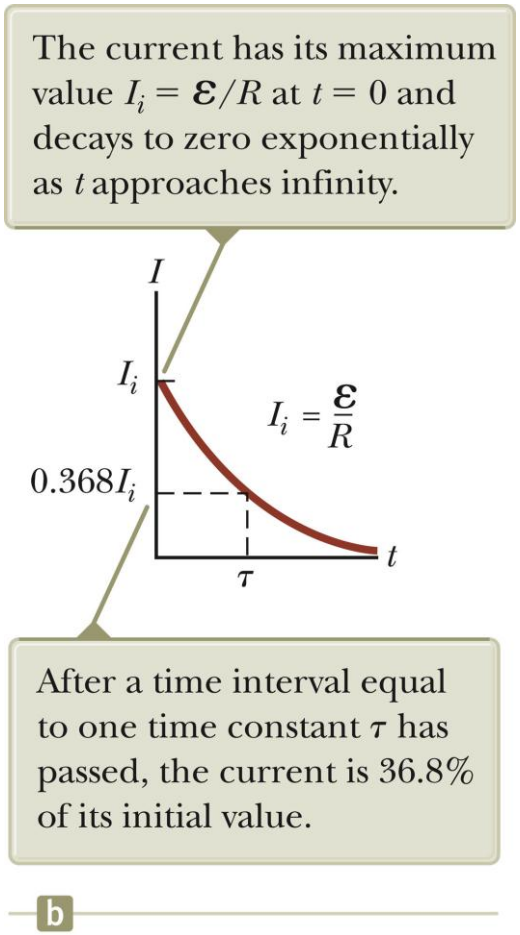

CENGAGE Learning™

Discharging Capacitor

At $t = \tau = RC$, the charge decreases to 0.368 Q_{max}

- In other words, in one time constant, the capacitor loses 63.2% of its initial charge.

The current can be found

$$I(t) = \frac{dq}{dt} = -\frac{Q}{RC} e^{-t/RC}$$

Both charge and current decay exponentially at a rate characterized by $\tau = RC$.

CENGAGE Learning™

Household Wiring

The utility company distributes electric power to individual homes by a pair of wires.

Each house is connected in parallel with these wires.

One wire is the “live wire” and the other wire is the neutral wire connected to ground.

CENGAGE Learning™

Household Wiring, cont

The potential of the neutral wire is taken to be zero.

- Actually, the current and voltage are alternating

The potential difference between the live and neutral wires is about 120 V.

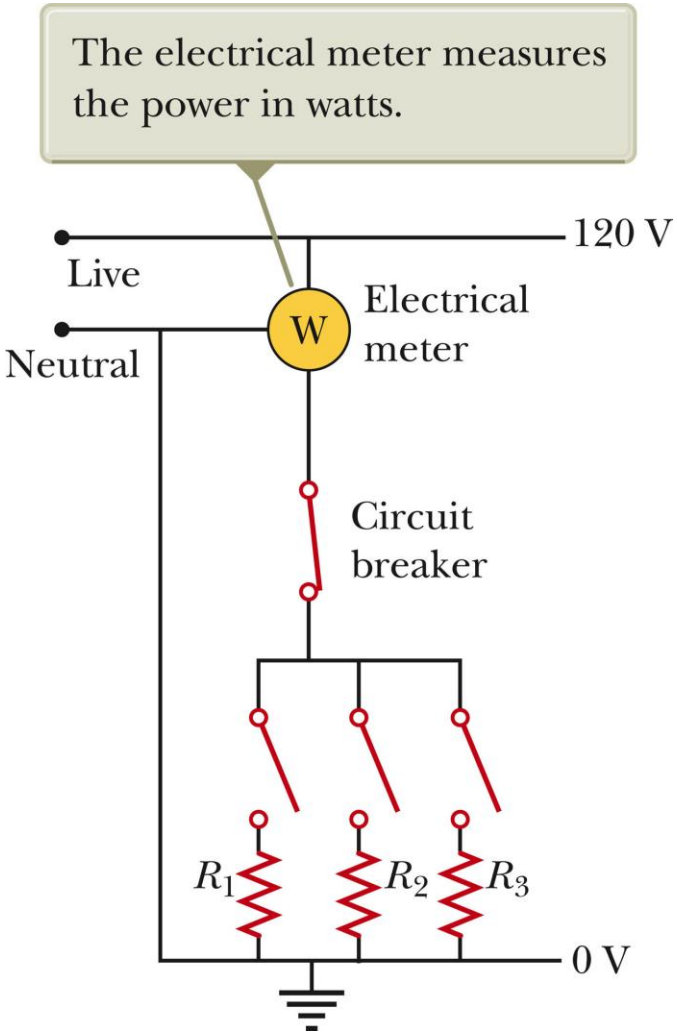

CENGAGE Learning™

Household Wiring, final

A meter is connected in series with the live wire entering the house.

- This records the household's consumption of electricity.

After the meter, the wire splits so that multiple parallel circuits can be distributed throughout the house.

Each circuit has its own circuit breaker.

For those applications requiring 240 V, there is a third wire maintained at 120 V below the neutral wire.

CENGAGE Learning™

Short Circuit

A *short circuit* occurs when almost zero resistance exists between two points at different potentials.

This results in a very large current

In a household circuit, a circuit breaker will open the circuit in the case of an accidental short circuit.

- This prevents any damage

A person in contact with ground can be electrocuted by touching the live wire.

CENGAGE Learning™

Electrical Safety

Electric shock can result in fatal burns.

Electric shock can cause the muscles of vital organs (such as the heart) to malfunction.

The degree of damage depends on:

- The magnitude of the current
- The length of time it acts
- The part of the body touched by the live wire
- The part of the body in which the current exists

CENGAGE Learning™

Effects of Various Currents

5 mA or less

- Can cause a sensation of shock
- Generally little or no damage

10 mA

- Muscles contract
- May be unable to let go of a live wire

100 mA

- If passing through the body for a few seconds, can be fatal
- Paralyzes the respiratory muscles and prevents breathing

CENGAGE Learning™

More Effects

In some cases, currents of 1 A can produce serious burns.

- Sometimes these can be fatal burns

No contact with live wires is considered safe whenever the voltage is greater than 24 V.

CENGAGE Learning™

Ground Wire

Electrical equipment manufacturers use electrical cords that have a third wire, called a ground.

This safety ground normally carries no current and is both grounded and connected to the appliance.

If the live wire is accidentally shorted to the casing, most of the current takes the low-resistance path through the appliance to the ground.

If it was not properly grounded, anyone in contact with the appliance could be shocked because the body produces a low-resistance path to ground.

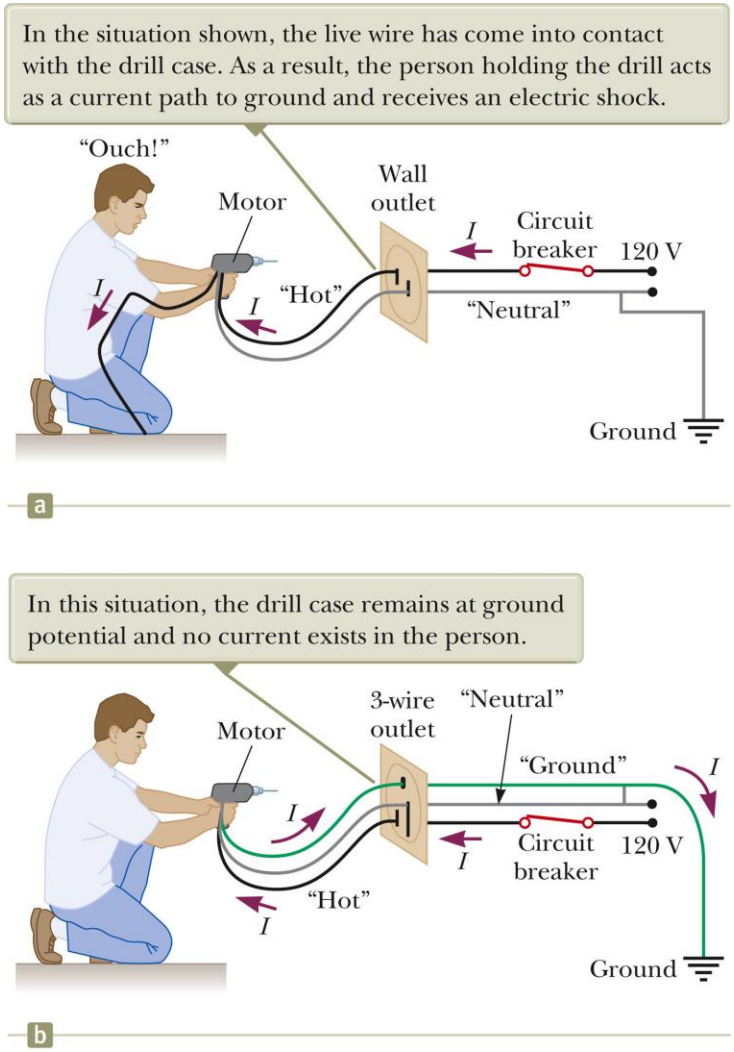

CENGAGE Learning™

Ground-Fault Interrupters (GFI)

Special power outlets

Used in hazardous areas

Designed to protect people from electrical shock

Senses currents (< 5 mA) leaking to ground

Quickly shuts off the current when above this level

CENGAGE Learning™